LIGURIA DUAL HANDLE KITCHEN SINK FAUCET WITH SPRAY SPECIFICATIONS

Features:

- Faucet body constructed of brass
- Double handle operation - handles rest on 1/4 turn valves
- Side spray aids with a variety of kitchen tasks
- 8" Centerset design

Specifications:

- Overall Height: 13-7/16” (measured from counter top to highest part of faucet)
- Spout Height: 10-3/4” (measured from counter top to spout outlet)
- Spout Reach: 9-3/16” (measured from center of faucet base to center of spout outlet)
- Side Spray Height: 5-11/16”
- Number of Holes Required for Installation: 4
- Faucet Centers (Distance Between Handle Installation Holes): 8"
- Flow Rate: 2.2 GPM (gallons-per-minute)
- Maximum Deck Thickness: 2-1/2”
- Two handles included with faucet
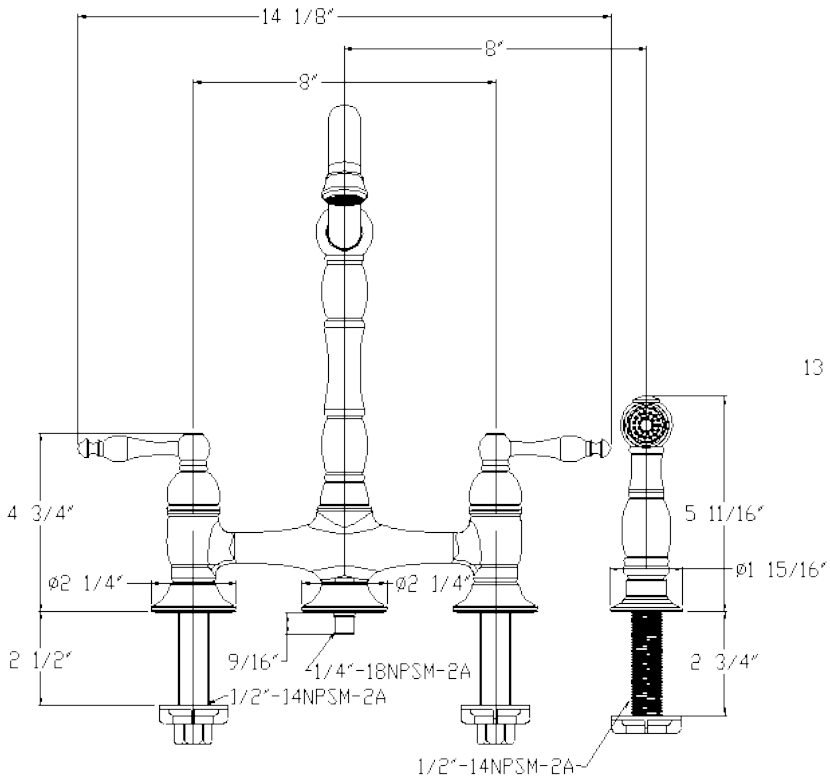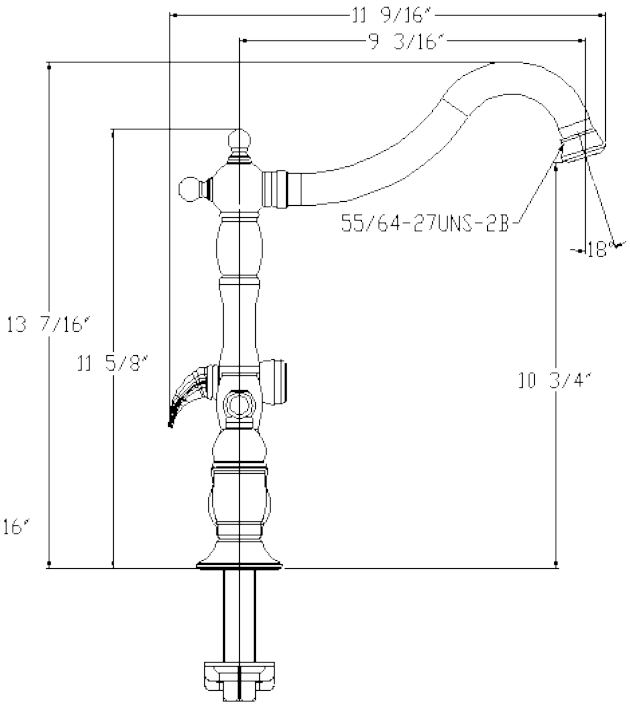
Size: